NIOB FLUID

07

PRODUCER OF STAINLESS PIPPING SYSTEMS

HERSTELLER VON EDELSTAHLARMATUREN

ACCESSORIES

ZUBEHÖR

www.niobfluid.cz

02/2026

Catalogues NIOB FLUID
Kataloge NIOB FLUID

02 PIPE UNIONS
ROHRVERBINDUNGEN

03 FITTINGS
ROHRFORMSTÜCKE

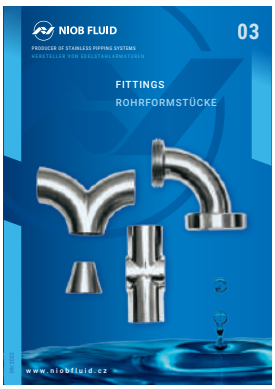

04 VALVES AND COCKS
VENTILE UND HÄHNE

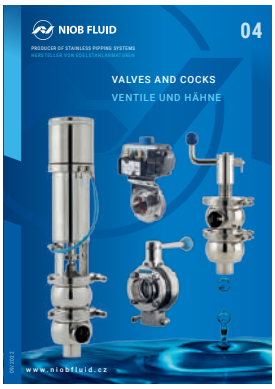

05 SPECIAL FITTINGS AND PARTS
SPEZIALARMATUREN UND TEILE

06 DOORS AND MANWAYS
MANNLOCHTÜREN UND KLAPPTÜREN

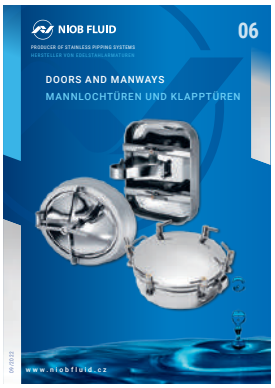

07 ACCESSORIES
ZUBEHÖR

08 DOUBLE-WALLED PIPING SYSTEMS
DOPPELWANDIGE ROHRSYSTEME

09 ASEPTIC PROGRAM
ASEPTISCHES PROGRAMM

Current versions of catalogs at www.niobfluid.cz • Aktuelle Katalogversionen unter www.niobfluid.cz

The company NIOB FLUID s. r. o. is a manufacturer focused on the production of fasteners, shut-off and control valves of stainless steels. These valves are especially designed for the transport of liquids in the food, chemical and the pharmaceutical industry. It is simultaneously also the supplier of pipe fittings and other parts needed for piping systems and components for tanks such as the lid, manwaydoor, level indicator and other components.

Die Gesellschaft NIOB FLUID s.r.o. ist ein Hersteller, der auf die Produktion von Verbindungs-, Absperr- und Regulierungsarmaturen aus Edelstahl orientiert ist. Diese Armaturen sind vor allem für den Transport von Flüssigkeiten in der Lebensmittel- und Chemieindustrie und in der Pharmazie bestimmt. Die Gesellschaft ist gleichzeitig auch Lieferant von Rohrverbindungsstücken und weiteren Teilen, die für die Rohrleitungen erforderlich sind, und von Behälterteilen wie Hauben, Luken, Standgläser und weitere Komponenten.

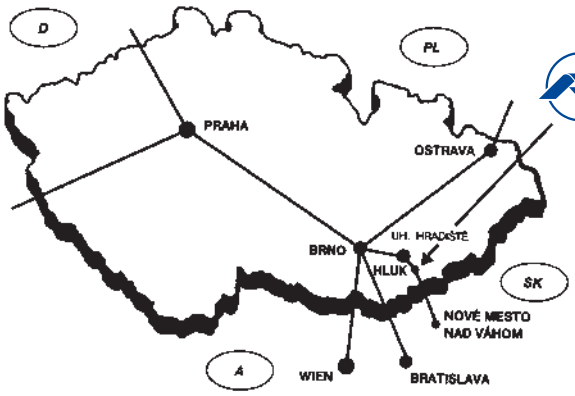

NIOB FLUID

NIOB FLUID s. r. o.
Ostrožská 1003, 687 25 Hluk, Czech Republic
Phone: +420 572 419 822 – 8, Fax: +420 572 419 868
E-mail: marketing@niobfluid.cz, www.niobfluid.cz

Pipe clamp
Rohrschelle ohne Schaft

70210 **Dimensions** • Baumaße

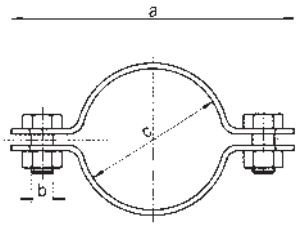

DN	A	B	C	D	E	F	R	L	Rd x s	kg
10	46	M6	13							
15	50	M6	19							
20	55	M6	23							
25	73	M6	29							
32	70	M6	35							
40	84	M8	41							
50	97	M8	53							
65	120	M8	70							
80	136	M8	85							
100	181	M8	104							
125	202	M8	129							
150	231	M8	154							

Pipe clamp
Rohrschelle mit Schaft

70220 **Dimensions** • Baumaße

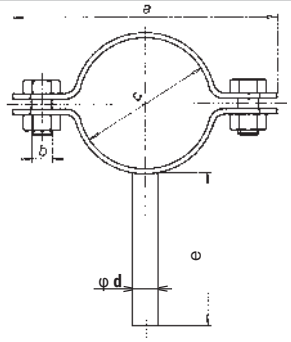

DN	A	B	C	D	E	F	R	L	Rd x s	kg
10	46	M6	13	6	60					
15	50	M6	19	8	60					
20	55	M6	23	8	60					
25	73	M6	29	8	60					
32	70	M6	35	10	60					
40	84	M8	41	10	60					
50	97	M8	53	12	60					
65	120	M8	70	15	60					
80	136	M8	85	15	60					
100	181	M8	104	15	60					
125	202	M8	129	18	60					
150	231	M8	154	18	60					

Pipe clamp - sliding - simple
Gleitschellensystem - eine Schelle

70261 **Dimensions** • Baumaße

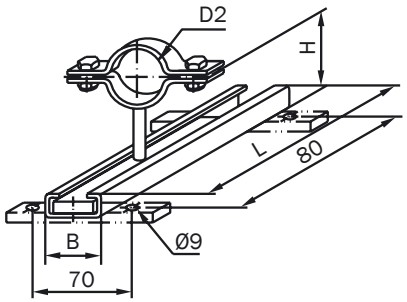

DN	D2	H	B	L	korekce délky	F	R	L	Rd x s	kg
10	13	71	30	120	50					0,24
15	20	74,5	30	120	50					0,27
20	25	77	30	120	50					0,28
25	30	79,5	30	120	50					0,30
32	36	82,5	30	120	50					0,31
40	42	85,5	30	120	50					0,32
50	55	92	30	120	50					0,33
65	72	100,5	30	120	50					0,36
80	86	107,5	30	120	50					0,47
100	105	117	30	120	50					0,52
125	130	129,5	30	120	50					
150	156	142,5	30	120	50					

Pipe clamp - sliding - double
Gfleitschellensystem-zwei Schellen

70262 **Dimensions** • Baumaße

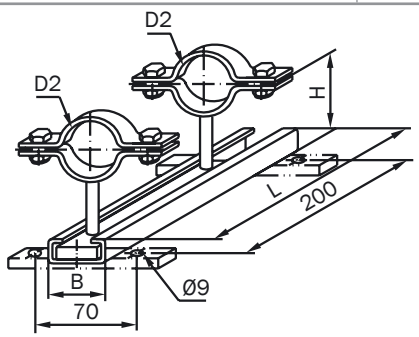

DN	D2	H	B	L	korekce délky	F	R	L	Rd x s	kg
10	13	71	30	300	100					0,28
15	20	74,5	30	300	100					0,34
20	25	77	30	300	100					0,36
25	30	79,5	30	300	100					0,40
32	36	82,5	30	300	100					0,42
40	42	85,5	30	300	100					0,44
50	55	92	30	300	100					0,46
65	72	100,5	30	300	100					0,52
80	86	107,5	30	300	100					0,74
100	105	117	30	300	100					0,84
125	130	129,5	30	300	100					
150	156	142,5	30	300	100					

Pipe support, short
Rohrspannbügel

70300

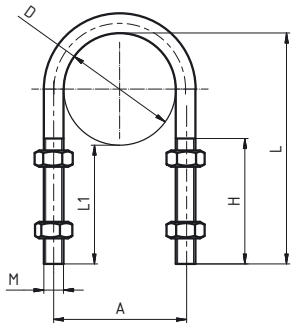

Dimensions • Baumaße

DN	A	B	C	D	H	L	L1	M	Rd x s	kg
10	19			12	35	47	35	M6		
15	24			18	40	53	35	M6		
20	28			22	45	57	35	M6		
25	34			28	50	63	35	M6		
32	40			34	50	69	35	M6		
40	48			40	50	75	35	M8		
50	60			52	50	87	35	M8		
65	78			70	50	105	35	M8		
80	95			85	50	120	35	M10		
100	114			104	50	139	35	M10		
125	139			129	50	164	35	M10		
150	164			154	50	189	35	M10		
200	214			204	50	239	35	M10		

Pipe support, medium
Rohrspannbügel

70310

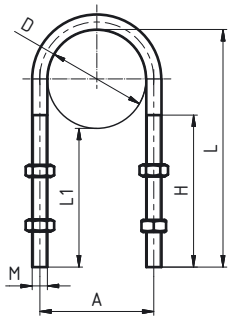

Dimensions • Baumaße

DN	A	B	C	D	H	L	L1	M	Rd x s	kg
10	18			12	65	77	65	M6		
15	24			18	70	83	65	M6		
20	28			22	75	87	65	M6		
25	34			28	80	93	65	M6		
32	40			34	80	99	65	M6		
40	48			40	80	105	65	M8		
50	60			52	80	117	65	M8		
65	78			70	80	135	65	M8		
80	95			85	80	150	65	M10		
100	114			104	80	169	65	M10		
125	139			129	80	194	65	M10		
150	164			154	80	219	65	M10		
200	214			204	80	269	65	M10		

Pipe support, long
Rohrspannbügel

70320

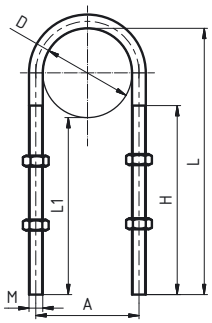

Dimensions • Baumaße

DN	A	B	C	D	H	L	L1	M	Rd x s	kg
10	18			12	95	107	95	M6		
15	24			18	100	113	95	M6		
20	28			22	105	117	95	M6		
25	34			28	110	123	95	M6		
32	40			34	110	129	95	M6		
40	48			40	110	135	95	M8		
50	60			52	110	147	95	M8		
65	78			70	110	165	95	M8		
80	95			85	110	180	95	M10		
100	114			104	110	199	95	M10		
125	139			129	110	224	95	M10		
150	164			154	110	249	95	M10		
200	214			204	110	299	95	M10		

Key
Hakenschlüssel

70500

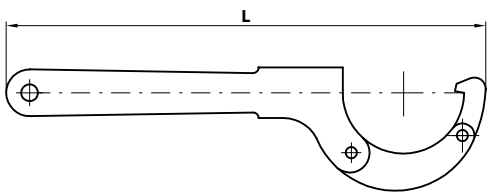

Dimensions • Baumaße

DN	A	B	C	E	E	F	L	Rd x s	kg
25 - 65							270		
65 - 150							450		

Bolt - DIN 931
Schraube hexagonal - DIN 931

71060

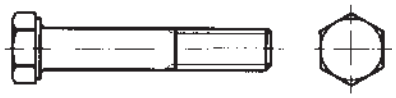

Dimensions • Baumaße

DN	A	B	C	D	E	F	R	L	Rd x s	kg
M4										
M5										
M6										
M8										
M10										
M12										
M14										
M16										

Nut - DIN 934
Mutter - DIN 934

71070

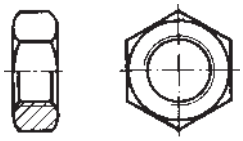

Dimensions • Baumaße

DN	A	B	C	D	E	F	R	L	Rd x s	kg
M4										
M5										
M6										
M8										
M10										
M12										
M14										
M16										

Washer
Scheibe

71090

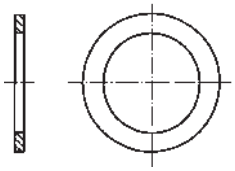

Dimensions • Baumaße

DN	A	B	C	D	E	F	R	L	Rd x s	kg
M4										
M5										
M6										
M8										
M10										
M12										
M14										
M16										

Welding wire
Sweissdrath

73010

Ø 1 - 4 mm
lenght 1 m

Dimensions • Baumaße

DN	A	B	C	D	E	F	R	L	Rd x s	kg
1,0										
1,2										
1,6										
2,0										
2,4										
3,2										
4,0										

Electrode (welding)
Elektroden

73050

Dimensions • Baumaße

DN	A	B	C	E	E	F	R	L	Rd x s	kg
1,6										
2,0										
2,5										
3,25										
4,0										
5,0										

Ø 1,6 - 5 mm
lenght 250 - 450 mm

Pickling paste for non-corrosive steel
Beizpaste

75010

Dimensions • Baumaße

DN	A	B	C	D	E	F	R	L	Rd x s	kg
										2
										4
										6
										8
										10
										15
										14
										16
										18
										20

mořicí pasta

Special flexible hose for vine
Spezial flexible Schlauch für wine

76060

Dimensions • Baumaße

DN	ØD [mm]	Pressure [bar]	Under-pressure [bar]	Weight [kg/m]	Lenght [m]					kg
25	32,0	8	0,9	0,40	50					
30	38,0	8	0,9	0,50	50					
32	40,0	8	0,9	0,52	50					
35	43,2	8	0,9	0,60	50					
38	47,0	8	0,9	0,73	50					
40	49,0	8	0,9	0,75	50					
45	54,0	8	0,9	0,90	50					
50	59,6	8	0,9	1,10	50					
60	70,0	7	0,9	1,45	50					
63	73,6	7	0,9	1,68	50					
70	82,4	6	0,9	1,80	50					
75	88,6	6	0,9	1,90	50					
80	94,0	5	0,9	2,20	50					
90	105,0	5	0,9	2,56	30					
100	116,0	4	0,9	3,30	30					

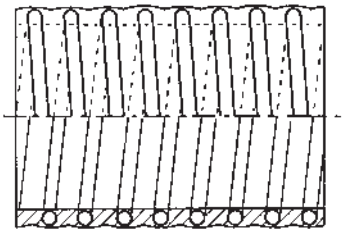

CHARAKTERISTIC:
Flexible hose. Temperature range: -5ºC +60ºC
Applications: suction and discharge of food stuffs, wine, beer.
Rigid PVC spiral. Smooth inside.

Suction and pressure hose for liquids in food industry
Druck-und Saug-Schläuche für die Lebensmittelindustrie

76070

DN	Pressure [bar]	Under-pressure [bar]	Weight [kg/m]	Lenght [m]	ØD [mm]					Dimensions • Baumaße kg
10	7	0,85	0,16	60	16					
12	7	0,85	0,18	60	18					
14	6	0,85	0,20	60	20					
16	6	0,85	0,24	60	22					
18	6	0,85	0,30	60	24					
20	5	0,85	0,35	60	27					
22	5	0,85	0,38	60	29					
25	5	0,85	0,51	60	33					
32	4	0,85	0,65	60	40					
35	4	0,85	0,75	60	44					
40	3	0,80	0,87	30	50					
45	3	0,80	1,13	30	55					
50	3	0,80	1,20	30	60					
60	3	0,80	1,80	30	72					
63	3	0,80	1,85	30	75					

Temperature range:
-5 °C to +60 °C
Safety:
- 3:1
Reinforcement:
- Spiral made of steel wire – guarantees high flexibility.

Material:
- Softened PVC – transparent, suitable for use in food industry, resistant against ozone

Use:
- Suction and discharge of food products without fat contents – potable water, juices, wine, alcoholic beverages up to 28% alc. vol., winegar, ketchup, etc.

Suction and pressure hose for liquids in food industry
Druck-und Saug-Schläuche für die Lebensmittelindustrie

76080

DN	Pressure [bar]	Under-pressure [bar]	Weight [kg/m]	Lenght [m]						Dimensions • Baumaße kg
20	8	0,7	0,30	50						
25	8	0,7	0,40	50						
32	7	0,7	0,48	50						
40	6	0,7	0,60	50						
45	6	0,7	0,70	50						
51	5	0,7	0,85	50						
60	5	0,7	1,00	50						
63	5	0,7	1,10	50						
70	5	0,7	1,25	50						
76	5	0,7	1,40	50						
80	4	0,7	1,60	30						
90	4	0,7	1,85	30						
102	4	0,7	2,20	30						

Temperature range:
-5 °C to +60 °C
Safety:
3:1
Reinforcement:
- Spiral made of hardened PVC - white

Material:
- Softened PVC – transparent (transparent yellow), suitable for use in food industry.

Use:
- Transport of food products without fat contents under low-pressure – potable water, juices, wine, alcoholic beverages up to 28% alc. vol., winegar, ketchup, etc.

Pressure and suction hose for milk and food
Druck-und Saugdchlauch fü Milch und Lebensmittel

76140

DN	ØD [mm]	Pressure [bar]	Under-pressure [bar]	Weight [kg/m]	Lenght [m]					kg
40	52	6	0,60	1,25	40/60					
50	63	6	0,60	2,19	40/60					
63	77	6	0,50	2,19	40/60					

Dimensions • Baumaße

Temperature range:
-35°C to +85°C
Safety:
- 3:1
Reinforcement:
- Textile braid, spirals of steel wire

Inner tube:
- Rubber NR – white, for use in food industry

Outer tube:
- Rubber NR – blue, resistive against ozone and wearing

Use:
- Suction and discharge of beverages, food and alcohol up to 40%. Especially suitable for milk tank trucks. Highly flexible design.

Note:
- Sterilisation using a sanitising solution at +100°C for a period of 30 minutes.

Pressure hoses for food
Druckschläuche für die Lebensmittelindustrie

76180

DN	ØD [mm]	Pressure [bar]	Weight [kg/m]	Lenght [m]						kg
13	22	10	0,26	60						
16	24	10	0,35	60						
19	28	10	0,44	60						
25	35	10	0,64	60						
32	44	10	1,01	60						
40	54	10	1,43	60						
51	65	10	1,78	60						
63	81	10	2,86	60						
76	92	10	2,65	60						
80	96	10	2,98	60						
102	123	10	5,15	60						

Dimensions • Baumaße

Temperature range:
-35 °C to +85 °C
Safety: • Безопасность:
- 3:1
Reinforcement:
- Textile braid

Inner tube:
- Rubber NR – natural rubber, for use in food industry:

Outer tube:
- Rubber SBR/EPDM – red, resistive against ozone and wearing

Use:
- Transport of food products, beer, wine, milk products, custards, distilled beverages up to 40%, etc.
The hose is not suitable for food containing vegetable and animal fats.

Note:
- Sterilisation using steam under pressure of 2,5 bar at + 130 °C for a period of 30 minutes or using a sanitising solution at + 90°C.

Pressure and suction hose for food
Druck-und Saug-Schläuche für die Lebensmittelindustrie

76210

DN	ØD [mm]	Pressure [bar]	Under-pressure [bar]	Weight [kg/m]	Lenght [m]					kg
25	38	10	0,95	0,91	40/60					
32	46	10	0,95	1,19	40/60					
38	52	10	0,95	1,45	40/60					
51	65	10	0,90	1,92	40/60					
63	80	10	0,90	2,83	40/60					
76	93	10	0,90	3,45	40/60					
80	98	10	0,85	3,90	40/60					
100	120	10	0,85	4,90	40/60					

Dimensions • Baumaße

Temperature range:
-35 °C to +120 °C
Safety:
- 3:1
Reinforcement:
- Textile braid, spirals of steel wire

Inner tube:, Внутренняя камера:
- Rubber IIR (Butyl) – white, for use in food industry, absolutely savour and odour neutral

Outer tube:, Внешнее покрытие:
- Rubber EPDM – red, for use in food industry, resistive against ozone and wearing

Use:
- Hoses of the highest quality. Suction and discharge of beverages, food and pure alcohol up to 98%. Especially suitable type for breweries and producers of hard drinks. Not suitable for oils and fats.

Note:
- Sterilisation using steam under pressure of 3 bar at max. temperature +160 °C for a period of 30 minutes or using a sanitising solution at +90 °C.

Pressure and suction hose for fats and oil
Druck-und Saugschläuche für Öl Fette

76220

DN	ØD [mm]	Pressure [bar]	Under-pressure [bar]	Weight [kg/m]	Lenght [m]					kg
25	34	10	0,95	0,60	40/60					
32	42	10	0,95	0,68	40/60					
38	48	10	0,95	0,84	40/60					
40	50	10	0,95	1,03	40/60					
51	62	10	0,90	1,40	40/60					
60	72	10	0,90	1,96	40/60					
63	76	10	0,90	2,04	40/60					
76	89	10	0,90	2,34	40/60					
80	94	10	0,85	2,46	40/60					
102	117	10	0,85	3,66	40/60					

Dimensions • Baumaße

Temperature range:,
-20°C to +80°C
Safety:
- 3:1
Reinforcement:
- Textile braid, spirals of steel wire

Inner tube:, Внутренняя камера:
- Rubber NBR – white, resistive against oils and fats, for use in food industry
savour and odour neutral

Outer tube:
- Rubber NR – blue, resistive against ozone and wearing

Use:
- Suction and discharge of food products containing vegetable and animal fats. Suitable also for discharge of beer, wine, milk products, distilled beverages up to 40%, etc

Note:
- Sterilisation using steam under pressure of 2.5 bar at +130 °C for a period of 30 minutes or using a sanitising solution at +60°C.

Hose clamp
Klammer

76100

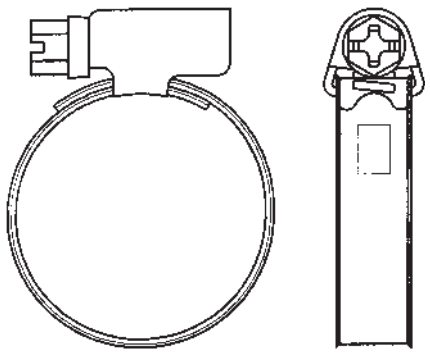

Dimensions • Baumaße

DN	A	B	C							kg
8 - 2										
10 -16										
12 - 20										
16 - 25										
20 - 32										
25 - 40										
30 - 45										
32 - 50										
40 - 60										
50 - 70										
60 - 80										
70 - 90										
10 - 100										
90 - 110										

Hose Power clamp W4
Fastigung Klammer

76120

Dimensions • Baumaße

DN	A	B	C							kg
20 - 22	18									
23 - 25	18									
26 - 28	18									
29 - 31	20									
32 - 35	20									
36 - 39	20									
40 - 43	20									
44 - 47	22									
48 - 51	22									
52 - 55	22									
56 - 59	22									
60 - 63	22									
64 - 67	22									
68 - 73	24									
74 - 79	24									
80 - 85	24									
86 - 91	24									
92 - 97	24									
98 - 103	24									
104 - 112	24									
113 - 121	24									
122 - 130	24									
131 - 139	26									
140 - 148	26									
149 - 161	26									

CONVERSION TABLE	UMRECHNUNGSTABELLE	
DN	(inch)	(mm)
8	**1/4"**	**6,35**
10	**3/8"**	**9,25**
15	**1/2"**	**12,7**
20	**3/4"**	**19,0**
25	**1"**	**25,4**
32	**1 1/4"**	**31,7**
40	**1 1/2"**	**38,1**
50	**2"**	**51,0**
65	**2 1/2"**	**63,5**
80	**3"**	**76,1**
100	**4"**	**104,0**

BAR CONVERSION CHARTS	BAR UMPRECHNUNGSTABELLE
1 Bar	100000 Pascals
	100 Kilopascals
	1000 Milibars
	1000000 Microbars
	~0,98 Atmospheres
	~401,46 Inches of wather
	10 Meters of wather
	~29,53 Inches of mercury
	~750 Milimeters of mercury
	~14,5 Pounds per square inches
	~1,02 Kilograms per square inches

MATERIALS USED

All units and parts listed in this catalogue are produced from non-corrosive acid-resistant Cr – Ni steel ČSN 17 240, which is the equivalent of the German standard DIN 1.4301. If the corrosion-proof requirements of the parts are higher they are produced from non-corrosive Cr-Ni-Mo steel ČSN 17 349 which conforms to DIN 1.4404.

Chemical composition of the most frequently used non-corrosive steels

ČSN PN	%C max.	%Si max.	%Mn max.	%P max.	%S max.	%Cr max.	%Mo max.	%Ni max.	%Ti max.
17 240	0.07	1.00	2.00	0.045	0.030	17.0-20.0	-	9.0 -11.5	-
17 249	0.03	1.00	2.00	0.045	0.030	17.0-20.0	-	10.0-12.5	-
17 346	0.07	1.00	2.00	0.045	0.030	16.5-18.5	2.0-2.5	10.5-13.5	-
17349	0.03	1.00	2.00	0.045	0.030	16.5-18.5	2.0-2.5	11.0-14.0	-
17 248	0.10	1.00	2.00	0.045	0.030	17.0-19.0	-	9.5-12.0	>=5xC
17 348	0.10	1.00	2.00	0.045	0.030	16.5-18.5	2.0-2.5	11.0-14.0	>=5xC

International standards conversion table for marking steels

Poldi	Czech Rep. PN	Germany DIN (W. Nr.)	USA ASTM	Italy UNI	France AFNOR	Russia GOST
AKV7	17240	1.4301	AISI 304	X5CrNi1810	Z7CN18-09	08Ch18N10
AKV2	17249	1.4306	AISI304L	X2CrNi1811	Z3CN19-121	03Ch18N11
AKV EX7	17346	1.4401	AISI 316	X5CrNiMo1712.2	Z7CND17-12-02	-
AKV EX2	17349	1.4404	AISI 316L	X2CrNiMo1713.2	Z3CND18-12-02	03Ch12N14M2
AKVS7	17248	1.4541	AISI 321	X6CrNiTi1811	Z6CNT18-10	08Ch18N10T
AKV EX S9	17348	1.4571	AISI 316Ti	X6CrNiMoTi1712	Z6CNDT17-12	08Ch17N13M2

DESIGN

The bulk of products are produced from bars or forged material. The material is in such a state that after welding it is not necessary to carry out further treatment. Tubular adapting pipes in their basic finish are pickled – matt, or treated – ground (brushed).

PIPE CONNECTING PARTS – DIN SCREW COUPLINGS

These are produced according to the DIN 11 851 standard and the screw thread according to the DIN 405 (ČSN 01 4037) standard. Connection of the sockets (screw thread or ring) to the tubes can be done in two ways:

a) butt welding
b) flaring the inside diameter

From diameters of 50mm and above it is necessary to ensure flaring of connections with a seam weld. Flared connections with a seam weld are hygienically unobjectionable and are suitable for pressures of 1 MPa (tested at a pressure of 2 MPa). Parts which do not correspond to any standards are produced according to branch or factory standards, and possibly workshop standards, and in some cases to approved technical drawings.

SEALING

Seals listed in this catalogue are produced from the following materials – SILICON, PERBUNAN, EPDM or VITON. They are supplied separately or as part of the set. Prices for tubular adapting pipes and sets of screw couplings do not include sealing rings.

MAINTENANCE

Without exception the materials used are suitable for general use in the food-processing industry. These materials are sensitive to high concentrations of chloride solutions and therefore we recommend that the instructions and recom-mendations of the manufacturer are heeded. Corrosion can only be prevented if these instructions are adhered to.

SPECIAL DESIGN

Apart from the standard parts listed in this catalogue we also supply special designs according to customer requirements and their technical documentation.

INSTRUCTIONS FOR ORDERING

For quick and simple processing of your order please supply the following data:

1	2	3	4
numerical labelling of goods	dimension(DN)	material	amount

If group „3" is not listed in the order we automatically supply material 17 240 (DIN 1.4301)

If you require other parts and units than those in this catalogue please send your specific requirements.

This issue nullifies all previous catalogues and delivery conditions listed in them.

We would be pleased to discuss your specific requirements and answer your questions in person. We look forward to your visit.

MATERIALS USED

All units and parts listed in this catalogue are produced from non-corrosive acid-resistant Cr – Ni steel ČSN 17 240, which is the equivalent of the German standard DIN 1.4301. If the corrosion-proof requirements of the parts are higher they are produced from non-corrosive Cr-Ni-Mo steel ČSN 17 349 which conforms to DIN 1.4404.

Chemical composition of the most frequently used non-corrosive steels

ČSN PN	%C max.	%Si max.	%Mn max.	%P max.	%S max.	%Cr max.	%Mo max.	%Ni max.	%Ti max.
17 240	0.07	1.00	2.00	0.045	0.030	17.0-20.0	-	9.0 -11.5	-
17 249	0.03	1.00	2.00	0.045	0.030	17.0-20.0	-	10.0-12.5	-
17 346	0.07	1.00	2.00	0.045	0.030	16.5-18.5	2.0-2.5	10.5-13.5	-
17349	0.03	1.00	2.00	0.045	0.030	16.5-18.5	2.0-2.5	11.0-14.0	-
17 248	0.10	1.00	2.00	0.045	0.030	17.0-19.0	-	9.5-12.0	>=5xC
17 348	0.10	1.00	2.00	0.045	0.030	16.5-18.5	2.0-2.5	11.0-14.0	>=5xC

International standards conversion table for marking steels

Poldi	Czech Rep. PN	Germany DIN (W. Nr.)	USA ASTM	Italy UNI	France AFNOR	Russia GOST
AKV7	17240	1.4301	AISI 304	X5CrNi1810	Z7CN18-09	08Ch18N10
AKV2	17249	1.4306	AISI304L	X2CrNi1811	Z3CN19-121	03Ch18N11
AKV EX7	17346	1.4401	AISI 316	X5CrNiMo1712.2	Z7CND17-12-02	-
AKV EX2	17349	1.4404	AISI 316L	X2CrNiMo1713.2	Z3CND18-12-02	03Ch12N14M2
AKVS7	17248	1.4541	AISI 321	X6CrNiTi1811	Z6CNT18-10	08Ch18N10T
AKV EX S9	17348	1.4571	AISI 316Ti	X6CrNiMoTi1712	Z6CNDT17-12	08Ch17N13M2

DESIGN

The bulk of products are produced from bars or forged material. The material is in such a state that after welding it is not necessary to carry out further treatment. Tubular adapting pipes in their basic finish are pickled – matt, or treated – ground (brushed).

PIPE CONNECTING PARTS – DIN SCREW COUPLINGS

These are produced according to the DIN 11 851 standard and the screw thread according to the DIN 405 (ČSN 01 4037) standard. Connection of the sockets (screw thread or ring) to the tubes can be done in two ways:

a) butt welding
b) flaring the inside diameter

From diameters of 50mm and above it is necessary to ensure flaring of connections with a seam weld. Flared connections with a seam weld are hygienically unobjectionable and are suitable for pressures of 1 MPa (tested at a pressure of 2 MPa). Parts which do not correspond to any standards are produced according to branch or factory standards, and possibly workshop standards, and in some cases to approved technical drawings.

SEALING

Seals listed in this catalogue are produced from the following materials – SILICON, PERBUNAN, EPDM or VITON. They are supplied separately or as part of the set. Prices for tubular adapting pipes and sets of screw couplings do not include sealing rings.

MAINTENANCE

Without exception the materials used are suitable for general use in the food-processing industry. These materials are sensitive to high concentrations of chloride solutions and therefore we recommend that the instructions and recom-mendations of the manufacturer are heeded. Corrosion can only be prevented if these instructions are adhered to.

SPECIAL DESIGN

Apart from the standard parts listed in this catalogue we also supply special designs according to customer requirements and their technical documentation.

INSTRUCTIONS FOR ORDERING

For quick and simple processing of your order please supply the following data:

1	2	3	4
numerical labelling of goods	dimension(DN)	material	amount

If group „3" is not listed in the order we automatically supply material 17 240 (DIN 1.4301)

If you require other parts and units than those in this catalogue please send your specific requirements.

This issue nullifies all previous catalogues and delivery conditions listed in them.

We would be pleased to discuss your specific requirements and answer your questions in person. We look forward to your visit.

Technical Information for Gaskets					
Title	**Silicon** (VMQ silicon rubber)	**EPDM** (ethylene-propylene-diene rubber)	**Viton** (FPM fluorine rubber)	**Perbunan** (NBR nitrile rubber)	**PTFE** (polytetrafluorethylene)
Temperature of use	It is stable in water up to 100 °C Possibility of sterilisati-on by steam short-term up to 120 °C to 130 °C	Permanent operating use from 40 °C to +140 °C Possibility of sterili-sation by steam up to 130 °C	Permanent operating use from 20 °C to +200 °C Possibility of sterilisati-on by steam short-term up to 130 °C to 140 °C	Permanent operating use from 25 °C to +110 °C Possibility of sterilisati-on by steam short-term up to 130 °C	Up to +200 °C it is physiologically har mless, use from 200 °C to +260 °C
Recommended use	High temperature load capacity It has good resistance to cold, suitable for food, it has dielectric properties. It has good resistance to alcohols.	It has good resistance to swelling for: • Diluted inorganic and organic acids, media, oxidising media, lyes, and ketones • Hot water and steam up to 130 °C	It has good resistance to swelling for: • Mineral oils • Plant and animal oils • Lubricants (also some additives) • Fuels	It has good resistance to swelling for: • Aliphatic hydrocar-bons (such as propane, butane, benzine, mineral oil) • Lubricants based on mineral oil	It has good resistance to swelling in almost all parts It has a smooth and repellent surface so sticking does not occur It has better chemical resistance than in all other elastomers Non-flammable material
Limited use (border)	Shows high swelling for: • Low-molecular esters and ethers • Aliphatic and aromatic hydrocarbons • Concentrated acids and alkali	Cannot be used for: • Plant and animal oils • Aliphatic, aromatic, and chlorinated hydro-carbons • Mineral oils	Shows high swelling for: • Polar solvents, such as acetone, methyl ketone, ethyl acetate, diethyl ether, and dioxane • Low-molecular orga-nic acids (formic acid and acetic acid) • Gaseous ammonia, amines and alkanes • Overheated water steam	Not resistant to: • Polar solvents • Chlorinated hydrocar-bons • Ketones • Aromatic hydrocar-bons (benzol) • Esters	Not resistant to: • Liquid alkaline metals and some compounds of fluorine in connecti-on with higher pressure and temperature The material does not show the flexibility of rubber.
Material approval	BGA/FDA	BGA/FDA	BGA/FDA	BGA/FDA	BGA/FDA

BGA = approval of the "Federal Health Authority" in Germany ("Bundesgesundheitsamt")
FDA = approval of the "US Food and Drug Administration"

Technische Informationen für Dichtringe					
Name	**Silikon** (VMQ)	**EPDM** (Ethylen-Propylen-Dien-Kautschuk)	**Viton** (FPM)	**Perbunan** (NBR)	**PTFE** (Polytetrafloutäthylen)
Einsatztemperatur	in Wasser bis 100°C beständig Dampfsterilisierbar kurzfristig bis 120°C - 130°C	Dauereinsatz von minus 40°C bis 140°C Dampfsterilisierbar bis 130°C	Dauereinsatz von minus 20°C bis 200°C Dampfsterilisierbar kurzfristig bis 130°C - 140°C	Dauereinsatz von minus 25°C bis 110°C Dampfsterilisierbar kurzfristig bis 130°C	bis 200°C physiologisch unbedenklich, Einsatz von -200°C bis +260°C
typ. Einsatzbereich	hohe thermische Belastbarkeit gute Kältebeständigkeit, für lebensmittel gut geeignet, dielektrische Eigensohaften gute Beständigkeit gegenüber Alkoholen	gute Quellbeständigkeit bei: • verdünnte anorg.- und organische Säuren, Medien, oxidierend wirkende Medien, Laugen und Kentonen • in Heißwasser und Dampf bis130°C	gute Quellbeständigkeit bei: • Mineralölen • pflanzlichen und tierischen Olen • Fetten (auch bestimmte Additive) • Kraftstoffe	gute Quellbeständigkeit • aliphatisohen Kohlenwasserstoffen (wie Propan, Butan, Benzin, Mineralölen) • Fett auf Mineralolbasis	gute Quellbeständigkeit in nahezu allen Teilen Oberfläche glatt und abweisend, dadurch kein Haften von Růckständen chemische Beständigkeit besser als bei allen anderen Elastomeren kaum brennbar
Einsatzgrenzen	hohe Quellung bei: • niedermolekularen Estem und Ethern • aliphatischen und aromatischen Kohlenwasserstoffen • konz. Säuren und Akalien	nicht einzusetzen bei: • pflanzlichen und tierischen Olen • aliphatischen aromatischen und chlorierten kohlenwasserstoffen • Mineralöle	stark quellend bei: • polaren Lösungsmitteln wie Aceton, Methylketon, Ethylacetat, Diethylether u. Dioxane • niedermolekularen organ. Säuren (Ameisen - und Essigsäuren) • Ammoniakgase, Amine u. Alkanien • überhitzter Wasserdampf	nicht beständig bei: • polaren Lösungsmitteln • chlorierten Kohlenwasserstoffen • Ketone • Aromaten (Benzol) • Ester	nicht beständig bei: • flůssigen Alkalimetallen und einigen Flourverbindungen in Verbindung mit hohem Druck und Temperatur kein gummielastischer Werkstoff
Werkstoffzulassung	BGA/FDA	BGA/FDA	BGA/FDA	BGA/FDA	BGA/FDA

BGA = Bundesgesundheitsamt
FDA = US Food and Drug Administration

NIOB FLUID

PRODUCER OF STAINLESS PIPPING SYSTEMS

HERSTELLER VON EDELSTAHLARMATUREN

NIOB FLUID s. r. o.
Ostrožská 1003
687 25 Hluk
Czech Republic

Phone: +420 572 419 822 - 8
Fax: +420 572 419 868
E-mail: marketing@niobfluid.cz

www.niobfluid.cz